City of Bastrop – 58 62 142
(800 Bryant Park)

LPGCD OPERATING PERMIT CHECKLIST

Lost Pines Groundwater Conservation District Operating Permit Application

1. Application Date Shown? ..... (Yes) No NA
2. Well Number Assigned? ..... (Yes) No NA
3. Date Well Completed Shown? ..... Yes (No) NA
4. Applicants Name, Telephone Number and Address Shown? .... (Yes) No NA
5. Drilling Site Shown? ..... (Yes) No NA
6. County In Which Drilling Site Located Specified? ..... (Yes) No NA
7. Authorization to Drill Properly Shown? ..... (Yes) No NA
8. Copy of Authorization to Drill Attached? ..... (Yes) No NA
9. Request for Exemption Under District Rule 8.6 Specified? ..... (Yes) No NA
10. Type of Exemption Claimed Specified, if Appropriate? ..... Yes No (NA)
11. Purpose and Type of Well Specified? ..... (Yes) No NA
12. Amount to be Used Specified? ..... (Yes) No NA
13. Location of Water Usage Specified? ..... (Yes) No NA
14. Proposed Rate of Withdrawal in Gallons/Minute Specified? ..... (Yes) No NA
15. Applicant Has Specified Whether or Not it has Attached the Following:
    - Alternate Supply Plan? ..... Yes (No) NA
    - Conservation Plan? ..... (Yes) No NA
    - Well Closure Plan? ..... Yes (No) NA
16. Applicant has Specified Aquifer Impact? ..... Yes (No) NA – to be determin
17. Applicant has Specified Annual Amount of Withdrawal Requested:
    - In Acre-Feet/Year? ..... (Yes) No NA
    - In Gallons/Minute? ..... (Yes) No NA
18. Applicant has Specified Proposed Type of Well? ..... (Yes) No NA

19. Applicant has Specified Whether or not Well is to be Aggregated? (Yes) No NA

20. Applicant has Specified Whether Additional Supply Plan on File? Yes (No) NA

21. Applicant has Provided Additional Information (not required)? Yes No NA

22. Applicant has Certified that Info. In App. is True and Correct? (Yes) No NA

23. Applicant's Certification has been Notarized? ..... (Yes) No NA

Lost Pines Groundwater Conservation District Hearing Notice

24. Application Number Shown and Correct? ..... Yes No NA

25. Date of Application Shown? ..... Yes No NA

26. Applicant Adequately Identified? ..... Yes No NA

27. Date Drilling Permit Granted? ..... Yes No NA

28. Purpose of Well Identified? ..... Yes No NA

29. Proposed Use and Amount Shown:
    In Gal/Day? ..... Yes No NA
    In Acre-Feet/Year? ..... Yes No NA
    In Gallons/Minute? ..... Yes No NA

30. Location of Water Use Shown? ..... Yes No NA

31. Aggregation with Other Wells Requested? ..... Yes No NA

32. Applicants Estimate of Aquifer Impact Specified? ..... Yes No NA

33. Applicant has Specified Whether or Not it has Filed the Following Plans:
    Alternate Supply Plan? ..... Yes No NA

34. Applicant has Provided Additional Information (not required)? ... Yes No NA

35. Location Where Applicant's Information Available Specified? ... Yes No NA

36. Date, Location, and Time of Public hearing Specified? ..... Yes No NA

LOST PINES GROUNDWATER CONSERVATION DISTRICT

Well Drilling Application (Registration/Drilling Permit)

FORM 100

58 62 142
Well Number (Assigned by LPGCD)

10-12-10
Application Date (Date Received by LPGCD)

Return this Form to: LPGCD, PO Box 1027 (908 Loop 230), Smithville, TX 78957
Phone: 512-360-5088 FAX: 512-360-5448 Email: lpgcd@lostpineswater.org

$25.00 Fee For Returned Checks

well "I"

SECTION I – APPLICANT

City of Bastrop, James Miller — (512) 321-2124
NAME (First, Middle Initial, Last) — Phone Number

Street (or PO Box) P.O. Box 427

City Bastrop State Texas Zip 78602

SECTION II – DRILLING SITE DESCRIPTION

Physical Description of Proposed Location of Drilling Site.

Well Site: Bob Bryant Park

County Drilling Site is Located: BASTROP X LEE ____

SECTION III – AUTHORIZATION TO DRILL

Authorization to Drill on Property: Yes X No ____

If Property Owner is different from person shown in section I a notarized letter of authorization to drill from the property owner **must** be attached to this application.

N/A

SECTION IV – EXEMPTION

Request for Exemption Under Lost Pines Groundwater Conservation District Rule 8.6: *Yes ____ **No ✓

TYPE OF EXEMPTION CLAIMED:

____ A well drilled or equipped that is incapable of producing more than **25,000** gallons of groundwater per day.

____ A well used to supply the domestic needs of 10 or fewer households.

____ A well to provide drinking water used for feeding livestock and poultry.

____ An affidavit is on file with the District stating that production of well shall be limited to less than 25,000 gpd.

*** If Exemption Is Claimed, Please Continue to Section VIII**

****If No Exemption Is Claimed, Please Complete Sections V, VI, VII, and IX**

LOST PINES GROUNDWATER CONSERVATION DISTRICT
Well Drilling Application (Registration/Drilling Permit)

SECTION V – PURPOSE FOR WATER USE: NON-EXEMPT ONLY

Type of Well: Production Well

List Proposed Usage of Water Produced from Well and the Amount of Usage.

Use Municipal Water Supply Amount used 1,728,000 gallons/yr.

Use _____ Amount used _____ gallons/yr.

Will this well be used to export water outside the boundaries of LPGCD? Yes____ No X

If yes to question above: Gallons/yr. N/A

Maximum Annual Withdrawl: _____ Gal/yr.

Proposed rate at which water will be withdrawn: 1,000 gallons/min.

List CCN # of entity to benefit from water: 11198

Number of L.U.E. to be utilized by water usage: 4,300

SECTION VI – Beneficial Use: NON-EXEMPT ONLY

Please state beneficial use of well: (Attach letter if more space is necessary)

Drinking water source for the city of Bastrop.

SECTION VII – Plans: NON-EXEMPT ONLY

Please attach copies of the following Schedules or Logs, if available:

Well Closure Plan or Declaration ____ Alternative Supply Plan____ Conservation Plan X

AQUIFER IMPACT To be determined by pump test.

LOST PINES GROUNDWATER CONSERVATION DISTRICT
Well Drilling Application (Registration/Drilling Permit)

SECTION VIII – Affidavit of Exemption

Water Wells Capable of Producing More Than 25,000 GPD

I hereby certify that this well is exempt under the following provisions:

1. The well is used solely for agricultural and/or domestic use and is capable of producing more than 25,000 gallons per day;

2. Such well is registered with the District; and

3. The owner signs an affidavit with the District agreeing that such well will not actually produce more than 25,000 gallons on any day.

4. If such a well produces more than 25,000 gallons on any day, it must comply with the District's permitting requirements unless they are waived by the Board.

I agree to comply with the District's requirements as stated above and certify that this well will not produce more than 25,000 gallons per day on any day.

Signature of Well Owner

Date Submitted

SECTION IX – AFFIRMATION AND EXECUTION

I certify that all statements and information in this application are true and correct.

James Miller
Signature of Applicant

THE STATE OF **TEXAS**
COUNTY OF Bastrop

This instrument was acknowledged before me on September 29, 2010

By James Miller

KIMBERLY MCCLAIN
Notary Public, State of Texas
My Commission Expires
December 12, 2013

NOTARY SEAL

Kimberly McClain
Notary Signature

Can be notarized by any Notary of your choice, at the LPGCD Office, or General Manager can do the notary when he measures your well.

Rule 8.5(a) Aggregation

LOST PINES GROUNDWATER CONSERVATION DISTRICT

Well Drilling Application (Registration/Drilling Permit)

FORM 100

58 62 142 — **Well Number** (Assigned by LPGCD)

10-12-10 — **Application Date** (Date Received by LPGCD)

Return this Form to: LPGCD, PO Box 1027 (908 Loop 230), Smithville, TX 78957
Phone: 512-360-5088 FAX: 512-360-5448 Email: lpgcd@lostpineswater.org

$25.00 Fee For Returned Checks

SECTION I – APPLICANT WELL I

City of Bastrop, James Miller — NAME (First, Middle Initial, Last)

(512) 321-2124 — Phone Number

Street (or PO Box) P.O. Box 427

City Bastrop State Texas Zip 78602

SECTION II – DRILLING SITE DESCRIPTION

Physical Description of Proposed Location of Drilling Site.

Well Site: Bob Bryant Park

County Drilling Site is Located: BASTROP X LEE ____

SECTION III – AUTHORIZATION TO DRILL

Authorization to Drill on Property: Yes X No ____

If Property Owner is different from person shown in section I a notarized letter of authorization to drill from the property owner **must** be attached to this application.

N/A

SECTION IV – EXEMPTION

Request for Exemption Under Lost Pines Groundwater Conservation District Rule 8.6: *Yes____ **No ____

TYPE OF EXEMPTION CLAIMED:

____ A well drilled or equipped that is incapable of producing more than **25,000** gallons of groundwater per day.

____ A well used to supply the domestic needs of 10 or fewer households.

____ A well to provide drinking water used for feeding livestock and poultry.

____ An affidavit is on file with the District stating that production of well shall be limited to less than 25,000 gpd.

*** If Exemption Is Claimed, Please Continue to Section VIII**

****If No Exemption Is Claimed, Please Complete Sections V, VI, VII, and IX**

LOST PINES GROUNDWATER CONSERVATION DISTRICT

Well Drilling Application (Registration/Drilling Permit)

SECTION V – PURPOSE FOR WATER USE: NON-EXEMPT ONLY

Type of Well: Production Well FOR DECLARATION WITH EXISTING PERMITTED AMOUNT FOR CITY OF BASTROP - fc

List Proposed Usage of Water Produced from Well and the Amount of Usage.

Use Municipal Water Supply Amount used 1,728,000 gallons/yr. 53.0 AFY? 50% = 806.5 AFY

Use _____ Amount used _____ gallons/yr.

Will this well be used to export water outside the boundaries of LPGCD? Yes_____ No X

If yes to question above: Gallons/yr. N/A

Maximum Annual Withdrawl: _____ Gal/yr.

Proposed rate at which water will be withdrawn: 1,000 gallons/min.

List CCN # of entity to benefit from water: 11198

Number of L.U.E. to be utilized by water usage: 4,300 (ADDITIONAL) +101 GAL. PER HOUSEHOLD ? / GAL.

SECTION VI – Beneficial Use: NON-EXEMPT ONLY

Please state beneficial use of well: (Attach letter if more space is necessary)

POTABLE ~~Drinking~~ water source for the city of Bastrop.

SECTION VII – Plans: NON-EXEMPT ONLY

Please attach copies of the following Schedules or Logs, if available:

Well Closure Plan or Declaration _____ Alternative Supply Plan_____ Conservation Plan X

AQUIFER IMPACT To be determined by pump test.

LOST PINES GROUNDWATER CONSERVATION DISTRICT
Well Drilling Application (Registration/Drilling Permit)

SECTION VIII – Affidavit of Exemption

Water Wells Capable of Producing More Than 25,000 GPD

I hereby certify that this well is exempt under the following provisions:

1. The well is used solely for agricultural and/or domestic use and is capable of producing more than 25,000 gallons per day;

2. Such well is registered with the District; and

3. The owner signs an affidavit with the District agreeing that such well will not actually produce more than 25,000 gallons on any day.

4. If such a well produces more than 25,000 gallons on any day, it must comply with the District's permitting requirements unless they are waived by the Board.

I agree to comply with the District's requirements as stated above and certify that this well will not produce more than 25,000 gallons per day on any day.

Signature of Well Owner

Date Submitted

SECTION IX – AFFIRMATION AND EXECUTION

I certify that all statements and information in this application are true and correct.

James Miller
Signature of Applicant

THE STATE OF TEXAS
COUNTY OF Bastrop

This instrument was acknowledged before me on September 29, 2010

By James Miller

KIMBERLY MCCLAIN
Notary Public, State of Texas
My Commission Expires
December 12, 2013
NOTARY SEAL

Kimberly McClain
Notary Signature

Can be notarized by any Notary of your choice, at the LPGCD Office, or General Manager can do the notary when he measures your well.

LOST PINES GROUNDWATER CONSERVATION DISTRICT DRILLING PERMIT

well "I" pc

Lost Pines Well Number: 5862142

Permit Approval Date: 1/6/2011

Owner:

City of Bastrop

Address:

P O Box 427
Bastrop
TX 78602-

The above has been granted a permit by Lost Pines Groundwater Conservation District to drill a water well. The drilling must comply with the rules of the district and must be completed within one hundred and eigthty (180) days on issurance of permit. The well is located:

Bob Bryant Park - see attachment

in Bastrop County

The above plans on drilling a Municipal ***well. The well can withdraw a maximum*** 1613 ***acre-feet per year, at a maximum capacity of*** 1000 ***gallons per minute***

Joe Cooper, General Manager
Lost Pines Groundwater
Conservation District

1/6/11
Date

LPGCD Form 600
10/2000

Hearing Notice
Drilling Permit Application
Lost Pines Groundwater Conservation District

Application Number: 5862142
Date of Application: 10/12/2010
Applicant:

City of Bastrop

P O Box 427
Bastrop
TX 78602-

The above applicant has applied to the Lost Pines Groundwater Conservation District for a drilling permit. The applicant has provided the following information to the District:

Type of Well: Municipal

Well to be located in: Bastrop County

Well Site Loaction: Bob Bryant Park

To be used in: within City of Bastrop CCN

Proposed rate of withdraw: 1000 gal/m

- ☐ Alternative Supply Plan
- ☑ Conservation Plan
- ☐ Well Closure Plan

Well's impact on Aquifer:

Aquifer Produced:

Any person who wishes to contest a permit application must provide written notice of intent to the applicant and Lost Pines Groundwater Conservation District Office within 5 calendar days prior to the hearing date. LPGCD Rule 13.4(a) The information is available for review at the District's office.

A hearing has been scheduled for:

For more information contact: General Manager at 512-581-9056

Name of issurer: Joe Cooper

Issue Date: Wednesday, October 13, 2010

Lost Pines Groundwater Conservation District Deposit Receipt

City of Bastrop
P O Box 427
Bastrop TX 78602-

Has deposited $3,200.00 on 10/12/2010 by check 90028
for the drilling of a water well within the district's boundaries. The deposit will be returned upon filing of a well completion report with the district.

Peggy Campion

Joe Cooper, General Manager
Lost Pines Groundwater
Conservation District

10-13-10

Date

ryan W. Shaw, Ph.D., *Chairman*
Buddy Garcia, *Commissioner*
Carlos Rubinstein, *Commissioner*
Mark R. Vickery, P.G., *Executive Director*

File PWS/0110001/CO
CN 600339568
RN 101245066

TEXAS COMMISSION ON ENVIRONMENTAL QUALITY

Protecting Texas by Reducing and Preventing Pollution

April 15, 2010

Mr. Thomas M. Owens, P.E., Project Engineer
K Friese & Associates, Inc.
1120 S. Capital of Texas Highway, The Setting II, Suite 100
Austin, Texas 78746

Subject: Public Drinking Water System
Approval of Ground Water Rule Disinfection Protocol at the Bob Bryant Ground Water Treatment Plant
City of Bastrop – PWS ID No. 0110001
Bastrop County, Texas

Dear Mr. Owens:

The Texas Commission on Environmental Quality (TCEQ) has completed our review of the Groundwater CT Study that accompanied your letter dated March 5, 2010. The materials indicate that the City of Bastrop intends to provide a 4.0-log inactivation of viruses to meet Ground Water Rule (GWR) requirements at the Bob Bryant Ground Water Treatment Plant (GWTP). The TCEQ has reviewed the information contained in your letter and are approving the proposed compliance strategy for this entry point to the distribution system.

As long as the City of Bastrop continuously meets the viral inactivation requirement, triggered source water monitoring will not be required at any of the following wells:

1) BB-PW1 (TCEQ Well ID: G0110001N)

DESCRIPTION OF DISINFECTION PROCESS

The disinfection protocol at the Bob Bryant GWTP involves injecting chlorine into the raw water line and monitoring the free chlorine residual prior to distribution.

CT calculations are used to evaluate a disinfection process. Because disinfectant contact time is an important factor in assessing a disinfection process, the following T_{10} table was developed for Bob Bryant GWTP. The T_{10} values shown in this table are based on the data provided by your March 5, 2010 submittal, approval letter for interim use of TCEQ Well ID: G0110001N from TCEQ Utilities Technical Review team dated February 17, 2010, and approval letter for Bob Bryant Water Facilities Phase I well water transmission line and chemical treatment from TCEQ Utilities Technical Review team dated August 7, 2009.

TABLE 1: T_{10} TABLE FOR THE BOB BRYANT GWTP

TREATMENT UNIT	VOLUME (Gallons)	FLOW RATE (MGD)	BAFFLING FACTOR	CONTACT TIME, T_{10} (minutes)	MINIMUM SPECIFIED RESIDUAL (mg/L)
Piping	320(1)	0.576(4)	1.0(5)	0.8	0.83(6)
Piping	10,600(2)			26.4	
Piping	6,200(3)			15.6	

Notes:

(1) Based on pipe of diameter 12 inches and 54.45 feet in length, as per City of Bastrop's GW CT study of March 5, 2010.

(2) Based on pipe of diameter 36 inches and 200 feet in length, as per City of Bastrop's GW CT study of March 5, 2010.

(3) Based on pipe of diameter 12 inches and 1,061.1 feet in length, as per City of Bastrop's GW CT study of March 5, 2010.

(4) Based on the maximum flow rate of the well pumps reported in the City of Bastrop's Bob Bryant GWTP CT submittal dated March 5, 2010.

(5) Based on the assumption of "perfect" baffling characteristics of plug flow.

(6) Based on a maximum pH of 9.0 Standard Units and a minimum water temperature of 10°C.

Monitoring, Reporting, and Recordkeeping Requirements

Because you have elected to provide 4-log viral inactivation to meet GWR requirements, you must meet certain requirements associated with this compliance alternative. Specifically:

1. The system must continuously monitor and record the free chlorine residual at the designated monitoring point using instrumentation that meets the requirements of 30 TAC §290.116(c)(3)(C). If there is a failure in continuous monitoring equipment, the ground water system must conduct grab samples at least once every four hours until the continuous monitoring equipment is returned to service. The system must resume continuous residual disinfectant monitoring within 14 days.

2. If the measured residual falls below the approved MSR for a period longer than four consecutive hours, the operators must also measure and record:

   A. The flow rate through the pipes and,

   B. The pH and temperature of the water using instrumentation that meets the requirements of 30 TAC §290.116(c)(3)(C).

3. The system must complete the GWR 4-log MSR MOR, TCEQ Form 20362 each month.

   A. If the disinfectant residual falls below the MSR for more than 4 consecutive hours, the system must fax a copy of the MOR to (512) 239-3666 within 24 hours of the event so that we can determine if a treatment technique violation has occurred.

   B. The system must also provide us a copy of the report upon request.

4. The system must maintain a copies of all documentation needed to demonstrate compliance with the GWR in accordance with the requirements contained in 30 TAC 290.46(f)(3). For example:

   A. The system must maintain a copy of each GWR MSR MOR for a period of at least 10 years.

   B. The system must maintain records showing that the flow meters and laboratory

instruments have been calibrated in accordance with the requirements of 30 TAC 290.46(s); these records must be maintained for a period of at least 3 years.

Please note that the City of Bastrop must:

- **Notify TCEQ if the Bob Bryant GWTP wishes to discontinue 4-log treatment of viruses and begin utilizing triggered source water monitoring to meet GWR's requirements.**
- **Notify TCEQ of any proposed modifications to the design, operation, or disinfection protocol at the Bob Bryant GWTP.**
- **Maintain a chlorine residual of 0.2 mg/L throughout the distribution system at all times.**

As noted on the interim approval letter for the well, it appears the well is drilled into a hydrogeologically sensitive aquifer or has been deemed, by its location and/or construction, to be susceptible to fecal contamination. **The City of Bastrop Bob Bryant GWTP is required to submit a raw water sample for bacteriological analysis each month for the first twelve months of operation; these samples are in addition to the routine monthly distribution samples.** TCEQ will notify the City of Bastrop if the samples suggest additional treatment or testing is necessary. **These samples must be collected at a point prior to the disinfectant injection point. Copies of these results must be submitted to:**

TCEQ's Drinking Water Protection Team (MC 155)
P.O. Box 13087, Austin, Texas 78711-3087

Blank copies of the Minimum Specified Residual Monthly Operating Report (MSRMOR) spreadsheet and additional information about the Groundwater Rule can be obtained at the TCEQ's Groundwater Rule (GWR) website:

http://www.tceq.state.tx.us/permitting/water_supply/pdw/microbial/gwr_main.html

If you require further assistance or have questions concerning this letter or the GWR requirements, please contact the Drinking Water Protection Team by telephone at (512) 239-4691, by e-mail at PDWS@tceq.state.tx.us, or at the address located at the bottom of the first page of this letter.

Sincerely,

John Schildwachter, Team Leader
Drinking Water Protection Team
Public Drinking Water Section, (MC155)
Water Supply Division
Texas Commission on Environmental Quality

JS/PGG/av

Enclosures: GWDR MSR Worksheet

cc w/enclosures: TCEQ PWS File
TCEQ Austin Regional Office (R11)
The Honorable Terry Orr, Mayor, City of Bastrop, P.O. Box 427, Bastrop, Texas 78602-0427

CT STUDY

FOR PUBLIC WATER SYSTEMS THAT ARE USING SURFACE WATER SOURCES OR GROUND WATER SOURCES UNDER THE INFLUENCE OF SURFACE WATER (cont.)

Description Worksheet

PUBLIC WATER SYSTEM NAME: City of Bastrop **PWS ID No.:** 0110001

PLANT NAME OR NUMBER: Bob Bryant Ground Water Treatment Plant

Month: March
Day: 5
Year: 2010

Enter a detailed narrative description of the plant treatment processes and disinfection protocol.

The Bob Bryant Ground Water Treatment Plant (GWTP) treats water from well BB-PW1 (TCEQ Well ID: G0110001N) and achieves detention time through piping.

Disinfection is achieved by injecting chlorine into the pipeline and monitoring is done prior to distribution.

CT STUDY

FOR PUBLIC WATER SYSTEMS THAT ARE USING SURFACE WATER SOURCES OR GROUND WATER SOURCES UNDER THE INFLUENCE OF SURFACE WATER (cont.)

Schematic Worksheet

PUBLIC WATER SYSTEM NAME: City of Bastrop

PLANT NAME OR NUMBER: Bob Bryant Ground Water Treatment Plant

PWS ID No.: 0110001

Date: March 5, 2010

Use this worksheet to create your plant schematic with the Microsoft Drawing Tools.
If you are not familiar with the drawing tools, you may create your schematic using any other suitable medium.
Please refer to Section 3.3 of the Guidance Manual for instructions and guidance.

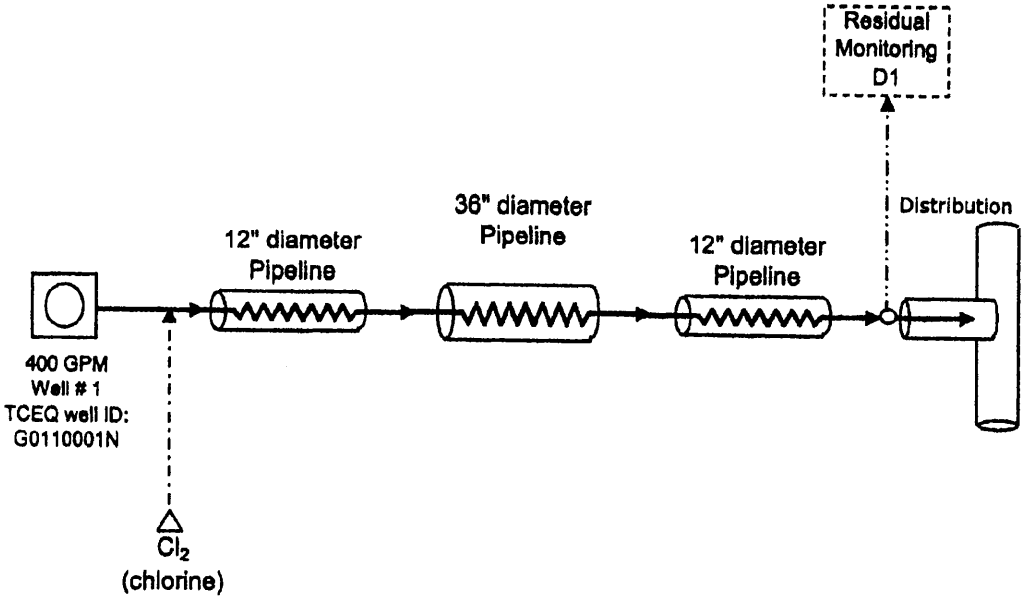

CT STUDY

FOR PUBLIC WATER SYSTEMS THAT ARE USING SURFACE WATER SOURCES OR GROUND WATER SOURCES UNDER THE INFLUENCE OF SURFACE WATER (cont.)

T10 Details Worksheet

PUBLIC WATER SYSTEM NAME: City of Bastrop **PWS ID No.:** 0110001

PLANT NAME OR NUMBER: Bob Bryant Ground Water Treatment Plant **Date:** March 5, 2010

Treatment Plant Capacity 400 gpm
0.576 mgd

Disinfection Zone: D1 **Disinfectant:** Free Chlorine

Unit - 1 Type: Piping Shape: Pipe

Further Description: 12-inch diameter Pipeline

Characteristic			Comments
Number of Units	1		
Diameter	12	in	Based on March 5, 2010 submittal
Length	54.45	ft	Based on March 5, 2010 submittal
Volume (each)	320	gal	
Flow Rate (each)	400	gpm	Based on March 5, 2010 submittal
Detention Time	0.8	min	
Baffling Factor	1.0		
			Baffling Characteristics: Perfect
			Approved Baffling Factor:
T_{10}	0.8	min	

Unit - 2 Type: Piping Shape: Pipe

Further Description: 36-inch diameter Pipeline

Characteristic			Comments
Number of Units	1		
Diameter	36	in	Based on March 5, 2010 submittal
Length	200	ft	Based on March 5, 2010 submittal
Volume (each)	10,577	gal	
Flow Rate (each)	400	gpm	Based on March 5, 2010 submittal
Detention Time	26.4	min	
Baffling Factor	1.0		
			Baffling Characteristics: Perfect
			Approved Baffling Factor:
T_{10}	26.4	min	

Unit - 3 Type: Piping Shape: Pipe

Further Description: 12-inch diameter Pipeline

Characteristic			Comments
Number of Units	1		
Diameter	12	in	Based on March 5, 2010 submittal
Length	1061.1	ft	Based on March 5, 2010 submittal
Volume (each)	6,235	gal	
Flow Rate (each)	400	gpm	Based on March 5, 2010 submittal
Detention Time	15.6	min	
Baffling Factor	1.0		
			Baffling Characteristics: Perfect
			Approved Baffling Factor:
T_{10}	15.6	min	
D1 FLOW RATE	**0.576**	**mgd**	
T10 SUM FOR D1	**42.8**	**min**	

Disinfection Zone: D2 **Disinfectant:**

Disinfection Zone: D3 **Disinfectant:**

Disinfection Zone: D4 **Disinfectant:**

Disinfection Zone: D5 **Disinfectant:**

Disinfection Zone: D6 **Disinfectant:**

Disinfection Zone: D7 **Disinfectant:**

Disinfection Zone: D8 **Disinfectant:**

Disinfection Zone: D9 **Disinfectant:**

Disinfection Zone: D10 **Disinfectant:**

CT STUDY

FOR PUBLIC WATER SYSTEMS THAT ARE USING SURFACE WATER SOURCES OR GROUND WATER SOURCES UNDER THE INFLUENCE OF SURFACE WATER (cont.)

Summary Worksheet

PUBLIC WATER SYSTEM NAME: City of Bastrop **PWS ID No.:** 0110001

PLANT NAME OR NUMBER: Bob Bryant Ground Water Treatment Plant **Date:** March 5, 2010

Disinfection Zone	Treatment Unit	Volume* (each) (gal)	Flow Rate* (each) (MGD)	Baffling Factor*	T_{10}* (min) Unit	T_{10}* (min) Zone
D1	12-inch diameter Pipeline (1)	320	0.576	1	0.8	42.8
	36-inch diameter Pipeline (1)	10,577	0.576	1	26.4	
	12-inch diameter Pipeline (1)	6,235	0.576	1	15.6	

* These values are calculated on the T10 Details Sheet

CT STUDY

FOR PUBLIC WATER SYSTEMS THAT ARE USING SURFACE WATER SOURCES OR GROUND WATER SOURCES UNDER THE INFLUENCE OF SURFACE WATER (cont.)

CT Calculator Worksheet

PUBLIC WATER SYSTEM NAME: City of Bastrop

PLANT NAME OR NUMBER: Bob Bryant Ground Water Treatment Plant

PWS ID No.: 0110001

Date: March 5, 2010

DISINFECTION PROCESS PARAMETERS

APPROVED CT STUDY PARAMETERS						PERFORMANCE STANDARDS	
						Log Inactivations	
Parameters	Disinfection Zones					Giardia lamblia Cysts	Viruses
	D1	D2	D3	D4	D5		
Flow Rate (MGD)	0.576					0.5	2.0
T_{10} (minutes)	42.8						

DISINFECTION PROCESS DATA

INDIVIDUAL DISINFECTION ZONES										PLANT TOTAL		
Disinfectant	C (mg/L)	Flow (MGD)	Temp (°C)	pH	CT_{CALC}	Giardia CT_{REQD}	Virus CT_{REQD}	Giardia Log	Virus Log	Giardia Log	Virus Log	Inact. Ratio
FCL D1	0.8	0.576	10.0	9.0	35.5	#NAME?	#NAME?	#NAME?	#NAME?			
D2					missing	missing	missing	missing	missing			
D3												
D4												
D5												

SUBMITTED BY: _____

Certificate No. and Grade: _____ **Date:** _____

CT STUDY

FOR PUBLIC WATER SYSTEMS THAT ARE USING SURFACE WATER SOURCES OR GROUND WATER SOURCES UNDER THE INFLUENCE OF SURFACE WATER (cont.)

CT Calculator Worksheet

PUBLIC WATER SYSTEM NAME: City of Bastrop

PLANT NAME OR NUMBER: Bob Bryant Ground Water Treatment Plant

PWS ID No.: 0110001

Date: March 5, 2010

DISINFECTION PROCESS PARAMETERS

APPROVED CT STUDY PARAMETERS						PERFORMANCE STANDARDS	
Parameters	Disinfection Zones					Log Inactivations	
	D6	D7	D8	D9	D10	Giardia lamblia Cysts	Viruses
Flow Rate (MGD)						0.5	2.0
T_{10} (minutes)							

DISINFECTION PROCESS DATA

INDIVIDUAL DISINFECTION ZONES										PLANT TOTAL		
Disinfectant	C (mg/L)	Flow (MGD)	Temp (°C)	pH	CT_{CALC}	Giardia CT_{REQD}	Virus CT_{REQD}	Giardia Log	Virus Log	Giardia Log	Virus Log	Inact. Ratio
D6												
D7												
D8												
D9												
D10												

SUBMITTED BY: _____

Certificate No. and Grade: _____ **Date:** _____

DRILLERS LOG OF TEST HOLE

LAYNE-TEXAS

a division of Layne Christensen Company

WATER SUPPLY SERVICES SINCE 1924
TEST DRILLING · WATER WELLS · PUMPS

TEST HOLE
T. H. 2

Contract Name: Bastrop Bryant Park Well
Job No. 37-8806 Date:
City: Bastrop State: TX Driller: Fred Helms

Location of Test Hole
Bob Bryant Park, Bastrop, Texas Lat. 30 deg. 7' 16", Lon. 97 deg. 20 ' 27"

FROM	TO	DESCRIPTION OF STRATA
0	1	topsoil
1	9	sandy clay
9	13	cobbles
13	27	1/4" - 3" gravel
27	45	cobbles
45	46	red clay
46	50	coarse sand and gravel
50	56	cobbles
56	61	blue clay

understood that failure to complete the required items will result in the log(s) being returned for completion and resubmittal.

Company Information:	**Layne Christensen Company** **5931 Brittmore Rd** **Houston , TX 77041**
Driller License Number:	**4633**
Licensed Well Driller Signature:	**Rik Allbritton for Fred Helms**
Registered Driller Apprentice Signature:	**No Data**
Apprentice Registration Number:	**No Data**
Comments:	**Fred Helm # 2882** **Amended 11/10/09 Re.#7697**

IMPORTANT NOTICE FOR PERSONS HAVING WELLS DRILLED CONCERNING CONFIDENTIALITY

TEX. OCC. CODE Title 12, Chapter 1901.251, authorizes the owner (owner or the person for whom the well was drilled) to keep information in Well Reports confidential. The Department shall hold the contents of the well log confidential and not a matter of public record if it receives, by certified mail, a written request to do so from the owner.

Please include the report's Tracking number (Tracking **#192497**) on your written request.

Texas Department of Licensing & Regulation
P.O. Box 12157
Austin, TX 78711
(512) 463-7880

DESC. & COLOR OF FORMATION MATERIAL

From (ft) To (ft) Description
0 - 1 Top Soil
1 - 9 Sandy Clay
9 - 13 cobbles
13 - 27 1/4" - 3" gravel
27 - 45 cobbles
46 - 46 Red Clay
46 - 50 coarse sand and gravel
50 - 56 cobbles
56 - 61 blue clay

CASING, BLANK PIPE & WELL SCREEN DATA

Dia. New/Used Type Setting From/To
30 New Carbon Steel 0 - 12 .375
24 New Carbon Steel +10 - 24 .375
16 New Carbon Steel + 10 - 37 .375
16 New Pipe Base S.S.W.W. 37 - 56
16 New Carbon Steel 56 - 66

STATE OF TEXAS WELL REPORT for Tracking #192497

Owner:	**City of Bastrop**	Owner Well #:	**Test Hole # 2**
Address:	**904 E. Mainstreet Bastrop , TX 78602**	Grid #:	**58-62-1**
Well Location:	**600 Charles Ave. Bastrop , TX 78602**	Latitude:	**30° 07' 16" N**
Well County:	**Bastrop**	Longitude:	**097° 20' 27" W**
Elevation:	**No Data**	GPS Brand Used:	**google earth**
Type of Work:	**New Well**	Proposed Use:	**Public Supply; Plans Approved by TCEQ**

Drilling Date: Started: **7/10/2009**
Completed: **7/26/2009**

Diameter of Hole: Diameter: **30 in From Surface To 36 ft**
Diameter: **26 in From 36 ft To 66 ft**

Drilling Method: **Reverse Circulation**

Borehole Completion: **Straight Wall** Gravel Packed From: **34 ft to 66 ft**
Gravel Pack Size:

Annular Seal Data: 1st Interval: **From 0 ft to 34 ft with 75 (#sacks and material)**
2nd Interval: **No Data**
3rd Interval: **No Data**
Method Used: **Halliburton**
Cemented By: **Layne Christensen Company**
Distance to Septic Field or other Concentrated Contamination: **No Data**
Distance to Property Line: **No Data**
Method of Verification: **No Data**
Approved by Variance: **No Data**

Surface Completion: **Alternative Procedure Used**

Water Level: Static level: **34.25 ft. below land surface on 8/11/2009**
Artesian flow: **No Data**

Packers: **No Data**

Plugging Info: Casing or Cement/Bentonite left in well: **No Data**

Type Of Pump: **Submersible**
Depth to pump bowl: **50 ft**

Well Tests: **Pump**
Yield: **506 GPM with 10.51 ft drawdown after 1 hour**

Water Quality: Type of Water: **Good**
Depth of Strata: **No Data**
Chemical Analysis Made: **Yes**
Did the driller knowingly penetrate any strata which contained undesirable constituents: **No**

Certification Data: The driller certified that the driller drilled this well (or the well was drilled under the driller's direct supervision) and that each and all of the statements herein are true and correct. The driller

JOHNSON SCREENS
11939 Aldine-Westfield Rd.
Houston, Texas 77093
800-237-7593
FAX 281-442-0503

Weatherford

SAND ANALYSIS PLOT

DATE SAMPLE ANALYZED 7 / 10 / 2009

JOB NAME BASTROP

CITY _____ STATE _____

CONTRACTOR LAYNE

SAMPLE NO. 0' - 50' Single Graph

SCREEN SLOT SIZE IF GRAVEL PACKED _____

SCREEN SLOT SIZE IF NATURAL DEV. _____

GRAVEL PACK RECOMMENDED _____

US SIEVE NUMBER	SLOT SIZE IN INCHES	CUMULATIVE PERCENT RETAINED
#12	0.0661	Single Graph Only
#16	0.0469	
#20	0.0331	
#30	0.0234	
#40	0.0165	
#50	0.0117	
#60	0.0098	
#70	0.0083	
#80	0.007	
#100	0.0059	
#200	0.0029	
Pan	0.0001	

SO MANY CONSIDERATIONS ENTER INTO THE MAKING OF A GOOD WELL THAT, WHILE WE BELIEVE SLOT SIZES FURNISHED OR RECOMMENDED FROM SUBMITTED SAND SAMPLES ARE CORRECT, WE ASSUME NO RESPONSIBILITY FOR THE SUCCESSFUL OPERATION OF ANY WELL

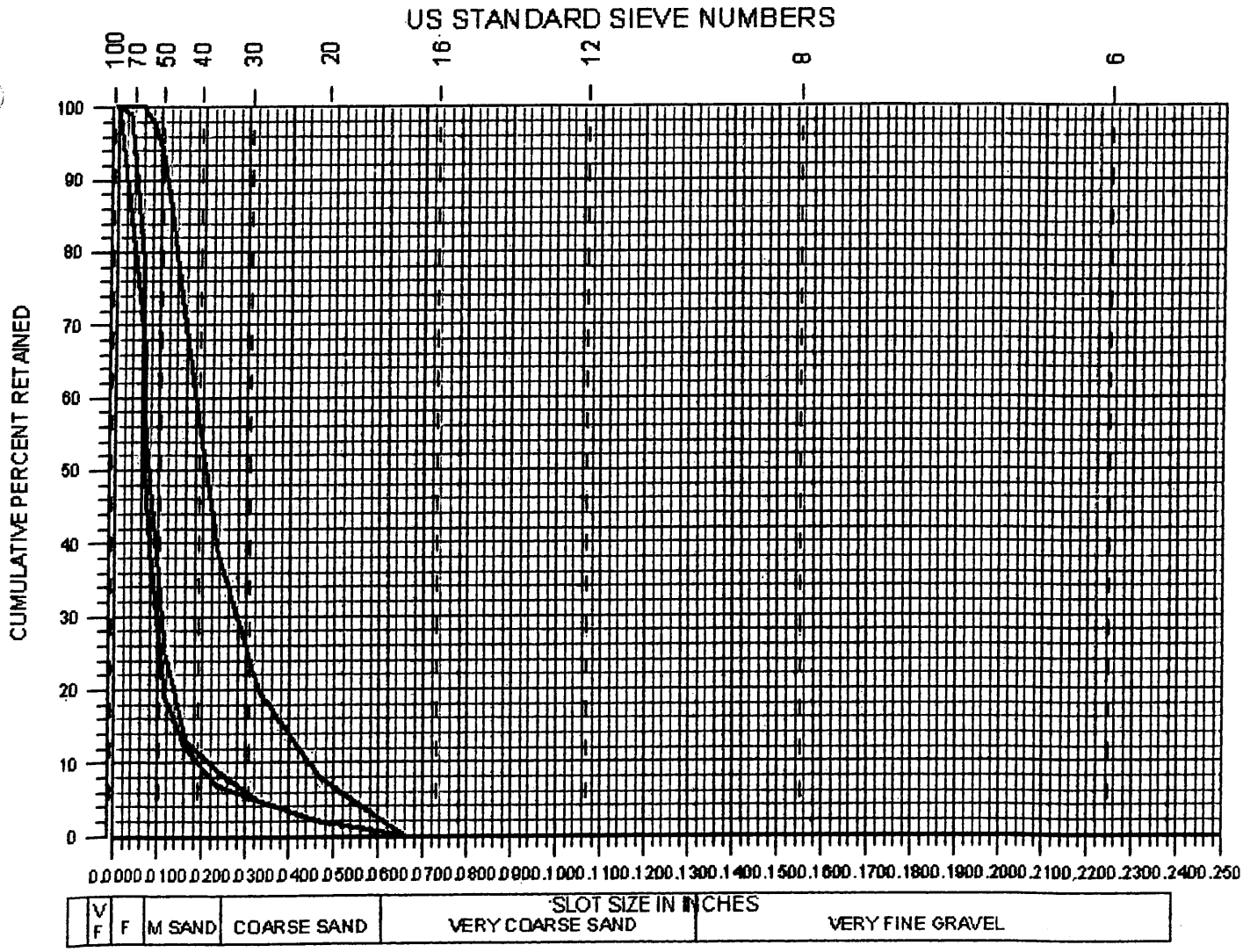

Johnson screens™

SAND ANALYSIS Semi - Graph

Weatherford

For: LAYNE

Location: BASTROP

Date: 07/10/09

DEPTH	0	5	10	15	20	25	30	35	40	45	50	
FEET	5	10	15	20	25	30	35	40	45	50	56	
GAUGE			*	*	*	*	*	*	*		*	
0.0661	0	0	-	-	-	-	-	-	-	0	-	
0.0469	2	2	-	-	-	-	-	-	-	8	-	
0.0331	5	5	-	-	-	-	-	-	-	20	-	
0.0234	7	9	-	-	-	-	-	-	-	39	-	
0.0165	12	13	-	-	-	-	-	-	-	67	-	
0.0117	19	25	-	-	-	-	-	-	-	89	-	
0.0098	29	37	-	-	-	-	-	-	-	95	-	
0.0083	38	47	-	-	-	-	-	-	-	98	-	
0.0070	48	56	-	-	-	-	-	-	-	99	-	
0.0059	71	80	-	-	-	-	-	-	-	100	-	
0.0029	86	99	-	-	-	-	-	-	-	100	-	
PAN	100	100	-	-	-	-	-	-	-	100	-	

*** = SAPLE LARGER THAN 1/4" IN SIZE**

****Values are in cumulative grams retained.**

y:\excel\sandana.xls

Cementer: Fill in shaded areas
Operator: Fill in other items

Form W-15
Cementing Report
Rev. 4-1-89
403-045

RAILROAD COMMISSION OF TEXAS
Oil and Gas Division

1 Operator's Name (As shown on Form P-5, Organization Report)	2 RRC Operator No	3 RRC District No	4 County of Well Site
		RRC #1	Bastrop

5 Field Name (Wildcat or exactly as shown on RRC records)	6 API No	7 Drilling Permit No.
Water Well	42-	

8 Lease Name	9 Rule 37 Case No.	10 Oil Lease Gas ID No	11 Well No
City of Bastrop			

CASING CEMENTING DATA:		SURFACE CASING	INTER-MEDIATE CASING	PRODUCTION CASING		MULTI-STAGE CEMENTING PROCESS	
				Single String	Multiple Parallel Strings	Tool	Shoe
12 Cementing Date		7/20/09					
13 *Drilled hole size		30					
*Est. % wash or hole enlargement		25%					
14 Size of casing (in. O.D.)		24					
15 Top of liner (ft.)							
16 Setting depth (ft.)		34					
17 Number of centralizers used							
18 Hrs. waiting on cement before drill out							
1st Slurry	19. API cement used: No. of sacks ▶	70					
	Class ▶	A					
	Additives ▶	none					
2nd Slurry	No. of sacks ▶						
	Class ▶						
	Additives ▶						
3rd Slurry	No. of sacks ▶						
	Class ▶						
	Additives ▶						
1st	20 Slurry pumped: Volume (cu. ft.) ▶	83					
	Height (ft.) ▶	47					
2nd	Volume (cu. ft.) ▶						
	Height (ft.) ▶						
3rd	Volume (cu. ft.) ▶						
	Height (ft.) ▶						
Total	Volume (cu. ft.) ▶	83					
	Height (ft.) ▶	47					
21 Was cement circulated to ground surface (or bottom of cellar) outside casing?		yes 2 bbl					

22 Remarks

OVER ▶

CEMENTING TO PLUG AND ABANDON	PLUG # 1	PLUG # 2	PLUG # 3	PLUG # 4	PLUG # 5	PLUG # 6	PLUG # 7	PLUG # 8
23 Cementing date								
24 Size of hole or pipe plugged (in.)								
25 Depth to bottom of tubing or drill pipe (ft.)								
26 Sacks of cement used (each plug)								
27 Slurry volume pumped (cu. ft.)								
28 Calculated top of plug (ft.)								
29. Measured top of plug, if tagged (ft.)								
30 Slurry wt. (lbs./gal.)								
31 Type cement								

CEMENTER'S CERTIFICATE: I declare under penalties prescribed in Sec. 91.143, Texas Natural Resources Code, that I am authorized to make this certification, that the cementing of casing and/or the placing of cement plugs in this well as shown in the report was performed by me or under my supervision, and that the cementing data and facts presented on both sides of this form are true, correct, and complete, to the best of my knowledge. This certification covers cementing data only.

Fred Helms, Superintendent — Typed or printed name of cementer's representative

Layne-Arkansas — Cementing Company

Fred Helms — Signature

2015 S. Main St. — Address

Stuttgart, AR 72160 — City, State, Zip Code

870-673-1591 — Tel.: Area Code Number

8-3-09 — Date: mo day yr

OPERATOR'S CERTIFICATE: I declare under penalties prescribed in Sec. 91.143, Texas Natural Resources Code, that I am authorized to make this certification, that I have knowledge of the well data and information presented in this report, and that data and facts presented on both sides of this form are true, correct, and complete, to the best of my knowledge. This certification covers all well data.

Richard H. Allbritton — Typed or printed name of operator's representative

Operations Mgr. — Title

Signature

5931 Brittmoore Rd — Address

Houston, TX 77041 — City, State, Zip Code

713-466-5001 — Tel.: Area Code Number

Date: mo day yr

Instructions to Form W-15, Cementing Report

IMPORTANT: Operators and cementing companies must comply with the requirements of the Commission's Statewide Rules 8 (Water Protection), 13 (Casing, Cementing, Drilling, and Completion), and 14 (Well Plugging). For offshore operations, see the requirements of Rule 13 (e).

A. **What to file.** An operator should file an original and one copy of the completed Form W-15 for each cementing company used on a well. The cementing of different casing strings on a well by one cementing company may be reported on one form. Form W-15 should be filed with the following:

- An initial oil or gas completion report, Form W-2 or G-1, as required by Statewide or special field rules;
- Form W-4, Application for Multiple Completion, if the well is a multiple parallel casing completion; and
- Form W-3, Plugging Record, unless the W-3 is signed by the cementing company representative. When reporting dry holes, operators must complete Form W-15, **in addition to Form W-3, to show any casing cemented in the hole.**

B. **Where to file.** The appropriate Commission District Office for the county in which the well is located.

C. **Surface casing.** An operator must set and cement sufficient surface casing to protect all usable-quality water strata, as defined by the Texas Department of Water Resources, Austin. Before drilling a well in any field or area in which no field rules are in effect or in which surface casing requirements are not specified in the applicable rules, an operator must obtain a letter from the Department of Water Resources stating the protection depth. Surface casing should not be set deeper than 200 feet below the specified depth without prior approval from the Commission.

D. **Centralizers.** Surface casing must be centralized at the shoe, above and below a stage collar or diverting tool, if run, and through usable-quality water zones. In nondeviated holes, a centralizer must be placed every fourth joint from the cement shoe to the ground surface or to the bottom of the cellar. All centralizers must meet API specifications.

E. **Exceptions and alternative casing programs.** The District Director may grant an exception to the requirements of Statewide Rule 13. In a written application, an operator must state the reason for the requested exception and outline an alternate program for casing and cementing through the protection depth for strata containing usable-quality water. The District Director may approve, modify, or reject a proposed program. **An operator must obtain approval of any exception before beginning casing and cementing operations.**

F. **Intermediate and production casing.** For specific technical requirements, operators should consult Statewide Rule 13 (b) (3) and (4).

G. **Plugging and abandoning.** Cement plugs must be placed in the wellbore as required by Statewide Rule 14. The District Director may require additional cement plugs. For onshore or inland wells, a 10-foot cement plug must be placed in the top of the well, and the casing must be cut off three feet below the ground surface. All cement plugs, except the top plug, must have sufficient slurry volume to fill 100 feet of hole, plus ten percent for each 1,000 feet of depth from the ground surface to the bottom of the plug.

To plug and abandon a well, operators must use only cementers approved by the Director of Field Operations. Cementing companies, service companies, or operators can qualify as approved cementers by demonstrating that they are able to mix and pump cement in compliance with Commission rules and regulations.

Layne-Texas
a division of Layne Christensen Co.

Job No: 37-8806
Date: 1/21/2010

MATERIAL SETTING

CUSTOMER LOCATION				WELL DATA			
For	City of Bastrop			Well Name	Bryant Park Well	Well No.	1
				Elevation	349 ft	Datum	msl
Well Location:	600 Charles Avenue			Well Type	Gravel Wall		
	Bastrop, Texas 78602			Surface Casing Cemented	Yes	No. Sacks	75 sacks
				Size Hole Underreamed	30"	Depth	66 ft.
County	Bastop	State	TX	Gravel Type	coarse, d50 = .09 in.	No. Cu. Yds.	3
				Static Water Level	34.25 ft		
Other Land Marks:	Bryant Park			Type Screer	SSWOP	Gage	.085"
				Driller	Fred Helms	Rig no.	LayneArk
				Other			

Depth	Length	Size, Kind, Weight Material
+9 ft. to 34 ft.	43 ft.	24-inch O.D. casing, 0.375 inch wall thickness
+ 8 to 36 ft.	44 ft.	16-inch O.D. blank liner, 0.375 inch wall thickness
36 to 56 ft.	20 ft.	16-inch pipe base screen - 304 SS screen wrapped on 16-inch O.D., 0.375-inch wall pipe
56 to 66 ft.	10 ft.	16-inch O.D. blank liner, 0.375 inch wall thickness

Sketch

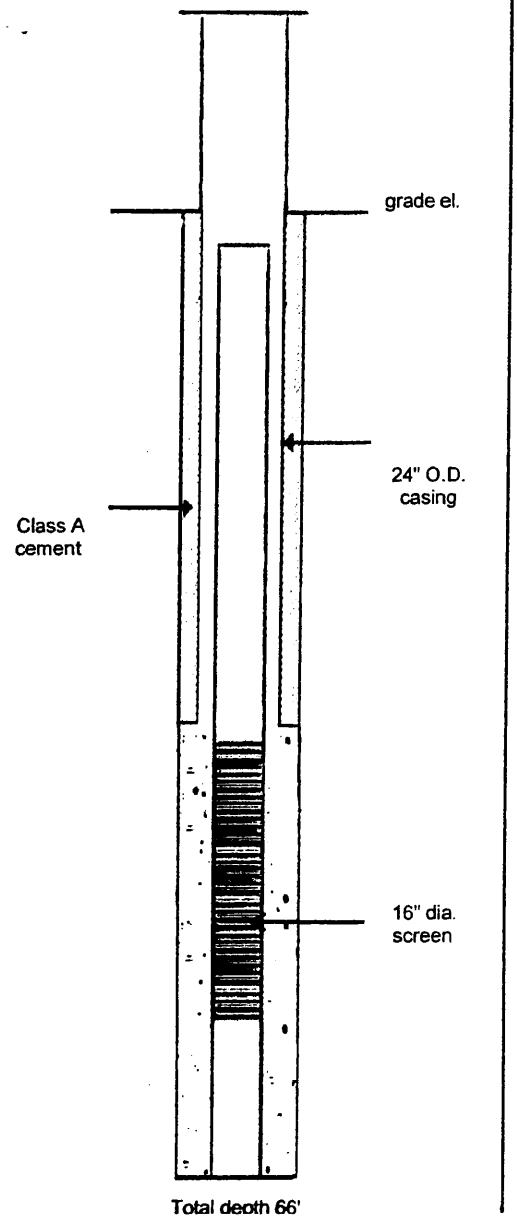

1 OF 6

LAYNE-TEXAS

a division Layne Christensen Company
5931 Brittmoore Road, Houston, TX 77041
Phone: 713-466-5001, Fax: 713-466-8397

WELL PUMPING RECORD

Well Name: [redacted] Job No: [redacted] Date: [redacted]

Static Level: [redacted] Pump Size: [redacted] Set Depth: [redacted] Orifice Size: [redacted]

TIME	ORIFICE READING IN.	VOLUME GPM	PUMPING LEVEL - FT.	DRAWDOWN FT.	SAND CONTENT MG/1000ML	COMMENTS
9:01	16.5	506	44.67	10.42		
9:02			44.76	10.51		
9:03			45.12	10.87		
9:04			45.14	10.89		
9:05			45.20	10.95		
9:06			45.22	10.97		
9:07			45.26	11.01		
9:08			45.30	11.05		
9:09			45.32	11.07		
9:10			45.33	11.08		
9:15			45.43	11.18		ADJ. Valve
9:20			45.40	11.15		
9:30			45.52	11.27		
9:40			45.62	11.37		
9:50			45.70	11.45		
10:00			45.76	11.51		
10:15			45.84	11.59	0	8.92 Ph 25.2
10:30			45.90	11.65		ADJ Valve
10:45			46.08	11.83		8.20 Ph 25.5
11:00			46.16	11.91		
11:15			46.22	11.97		7.70 Ph 24.7
11:30			46.30	12.05		7.44 Ph 24.6
11:45			46.31	12.06		
12:00			46.35	12.07	0	7.45 Ph 24.3
12:15			46.44	12.19		
12:30			46.48	12.23		
12:45			46.52	12.27		8.05 27.9
1:00			46.58	12.31		
1:15			46.60	12.35		

2 OF 6

LAYNE-TEXAS
a division Layne Christensen Company
5931 Brittmoore Road, Houston, TX 77041
Phone: 713-466-5001, Fax: 713-466-8397

WELL PUMPING RECORD

Well Name: [redacted] Job No: [redacted] Date: [redacted]

Static Level: [redacted] Pump Size: [redacted] Set Depth: [redacted] Orifice Size: [redacted]

TIME	ORIFICE READING IN.	VOLUME GPM	PUMPING LEVEL - FT.	DRAWDOWN FT.	SAND CONTENT MG/100ML	COMMENTS
1:30	16.5	506	46.62	12.37		
1:45			46.65	12.40		
2:00			46.68	12.43		
2:15			46.70	12.45	0	7.36 Ph 25.3
2:30			46.71	12.46		
2:45			46.73	12.48		
3:00			46.76	12.51		7.68 25.9
3:15			46.80	12.55		
3:30			46.85	12.60		
3:45			46.88	12.63		
4:00			46.88	12.63		ADJ VALVE
4:15			46.95	12.70	0	7.75 25.0
4:30			46.96	12.71		
4:45			46.97	12.72		
5:00			47.01	12.76		7.37 25.0
5:30			47.04	12.79		
6:00			47.06	12.81	0	7.28 25.0
6:30			47.10	12.85		
7:00			47.20	12.95	ADJ. Valve	7.20 24.7
7:30			47.10	12.85	ADJ. valve	
8:00			47.20	12.95		
8:30			47.24	12.99		7.12 23.7
9:00			47.27	13.02		
9:30			47.25	13.00		
10:00			47.28	13.03	0	7.15 24.1
10:30			47.33	13.08		
11:00			47.33	13.08		
11:30			47.34	13.09		6.61 23.4
12:01 AM			47.33	13.09		

3 OF 6

LAYNE-TEXAS

a division Layne Christensen Company
5931 Brittmoore Road, Houston, TX 77041
Phone: 713-466-5001, Fax: 713-466-8397

WELL PUMPING RECORD

Well Name: [redacted] Job No: [redacted] Date: [redacted]

Static Level: [redacted] Pump Size: [redacted] Set Depth: [redacted] Orifice Size: [redacted]

TIME	ORIFICE READING IN.	VOLUME GPM	PUMPING LEVEL - FT.	DRAWDOWN FT.	SAND CONTENT MI/1000ML.	COMMENTS
12:30 AM	16.5	506	47.37	13.12	0	7.20 23.3
1:00			47.37	13.12		ADJ. VALVE
1:30			47.48	13.23		
2:00			47.53	13.28	0	7.13 PH 22.8
2:30			47.54	13.29		
3:00			47.55	13.30		7.16 PH 22.9
3:30			47.55	13.30		
4:00			47.56	13.31		7.28 PH 22.8
4:30			47.57	13.32		
5:00			47.58	13.33		7.13 PH 23.1
5:30			47.62	13.37		
6:00			47.62	13.37		7.07 PH 23.0
6:30			47.64	13.39		
7:00			47.65	13.40		
7:30			47.65	13.40		7.06 23.5
8:00			47.65	13.40	0	7.00 PH 23.4
8:30			47.66	13.41		ADJ. VALVE
9:00			47.70	13.45		
9:30			47.66	13.41		
10:00			47.74	13.49	0	7.06 PH 24.1
10:30			47.70	13.45		
11:00			47.70	13.45		
11:30			47.69	13.44		
12:00 PM			47.69	13.44		
12:30			47.73	13.48		ADJ. VALVE
1:00			47.80	13.55		
1:30			47.87	13.62		
2:00			47.90	13.65		
2:30			47.90	13.65		

4 of 6

LAYNE-TEXAS
a division Layne Christensen Company
5931 Brittmoore Road, Houston, TX 77041
Phone: 713-466-5001, Fax: 713-466-8397

WELL PUMPING RECORD

Well Name: [redacted] Job No: [redacted] Date: [redacted]

Static Level: [redacted] Pump Size: [redacted] Set Depth: [redacted] Orifice Size: [redacted]

TIME	ORIFICE READING IN.	VOLUME GPM.	PUMPING LEVEL - FT.	DRAWDOWN FT.	SAND CONTENT MG/1000ML.	COMMENTS
3:00	16.5	506	47.85	13.60		
3:30			47.88	13.63		
4:00			47.84	13.59		
4:30			47.86	13.61	D	
5:00			47.84	13.59		ADJ. Valve
5:30			47.99	13.72		
6:00			47.85	13.60		ADJ. Valve
6:30			47.98	13.73		
7:00			48.00	13.75	O	
7:30			48.00	13.75		
8:00			47.95	13.70		
8:30			47.90	13.65		ADJ. Valve
9:00			48.10	13.85		662 GT
	Record					
9:01	36.37					
9:02	36.15					
9:03	36.06					
9:04	36.03					
9:05	36.00					
9:06	35.98					
9:07	35.96					
9:08	35.94					
9:09	35.92					
9:10	35.90					
9:15	35.85					
9:20	35.82					
9:30	35.76					
9:40	35.68					
9:50	35.65					

5 of 6

LAYNE-TEXAS
a division Layne Christensen Company
5931 Brittmoore Road, Houston, TX 77041
Phone: 713-466-5001, Fax: 713-466-8397

WELL PUMPING RECORD

Well Name: [redacted] Job No: [redacted] Date: [redacted]

Static Level: [redacted] Pump Size: [redacted] Set Depth: [redacted] Orifice Size: [redacted]

Recovery

TIME	CHRIS. READING IN.	VOLUME GPM	PUMPING LEVEL - FT.	DRAWDOWN FT.	SAND CONTENT MI/1000ML	COMMENTS
10:00	35.60					
10:15	35.53					
10:30	35.46					
10:45	35.42					
11:00	35.38					
11:15	35.32					
11:30	35.32					
11:45	35.28					
12:00 Am	35.25					
12:15	35.22					
12:30	35.20					
12:45	35.17					
1:00	35.16					
1:15	35.14					
1:30	35.10					
1:45	35.08					
2:00	35.06					
2:15	35.04					
2:30	35.02					
2:45	35.00					
3:00	35.00					
3:15	34.98					
3:30	34.96					
3:45	34.95					
4:00	34.94					
4:15	34.92					
4:30	34.91					
4:45	34.90					
5:00	34.88					

6 of 6

LAYNE-TEXAS
a division Layne Christensen Company
5931 Brittmoore Road, Houston, TX 77041
Phone: 713-466-5001, Fax: 713-466-8397

WELL PUMPING RECORD

Well Name: [redacted] Job No: [redacted] Date: [redacted]

Static Level: [redacted] Pump Size: [redacted] Set Depth: [redacted] Orifice Size: [redacted]

Recovery

TIME	DISCHARGE READING IN.	VOLUME GPM	PUMPING LEVEL - FT.	DRAWDOWN FT.	SAND CONTENT MG/1000ML	COMMENTS
5:30	34.88					
6:00	34.86					
6:30	34.84					
7:00	34.85					
7:30	34.80					
8:00	34.78					
8:30	34.76					
9:00	34.75					

ENVIRODYNE LABORATORIES, INC.

CERTIFICATE OF ANALYSIS

CLIENT: **BASTROP BRYANT PARK** (LAYNE-CHRISTENSEN)
LAB NUMBER: AB81329 **REVISED**
DATE COLLECTED: 11-Aug-09
DATE RECEIVED: 11-Aug-09
DATE COMPLETED: 24-Aug-09
SAMPLED BY: BC

LOCATION:

PARAMETERS	Well	EPA METHOD #	LIMITS (mg/l)
pH (Units)	7.71	SM 4500-H B	6.50 - 8.50
TOTAL HARDNESS as CaCO3(mg/l)	384.2	SM 2340 C	N/A
TOTAL ALKALINITY as CaCO3 (mg/l)	360.0	SM 2320 B	N/A
P. ALKALINITY as CaCO3 (mg/l)	<20.0	SM 2320 B	N/A
BICARBONATE (mg/l)	476.8	N/A	N/A
CARBONATE (mg/l)	<1.0	N/A	N/A
TOTAL DISSOLVED SOLIDS	416.0	SM 2540 C	1,000.0
CONDUCTANCE (umhos/cm)	703.0	SM 2510 B	N/A
FREE CO2 (mg/l)	>10.0	N/A	N/A
CORROSIVITY as Caco3 (mg/l)	< 1.0	305.1	Non-corrosive
SILICA (mg/l)	15.6	SM 4500-SiO2 D	N/A
CALCIUM as CaCO3 (mg/l)	272.4	200.7	N/A
MAGNESIUM as CaCO3 (mg/l)	111.8	200.7	N/A
CYANIDE (as Free mg/l)	< 0.02	SM 4500-CN E	0.2
SODIUM (mg/l)	16.5	200.7	N/A
POTASSIUM (mg/l)	0.9	200.7	N/A
TOTAL IRON (mg/l)	0.078	200.7	0.30 *
TOTAL MANGANESE (mg/l)	0.046	200.7	0.05 *
TOTAL ZINC (mg/l)	0.002	200.7	5.0 *
TOTAL ANTIMONY (mg/l)	0.002	200.7	0.006
TOTAL ALUMINUM (mg/l)	<0.005	200.7	0.05 - 0.20*
TOTAL ARSENIC (mg/l)	<0.005	200.7	0.01
TOTAL BARIUM (mg/l)	0.300	200.7	1.0
TOTAL BERYLLIUM (mg/l)	<0.001	200.7	0.004
TOTAL COPPER (mg/l)	<0.005	200.7	1.00
TOTAL SILVER (mg/l)	<0.005	200.7	0.05
TOTAL NICKEL (mg/l)	<0.005	200.7	0.10
TOTAL CADMIUM (mg/l)	<0.001	200.7	0.010
TOTAL CHROMIUM (mg/l)	<0.005	200.7	0.05
TOTAL LEAD (mg/l)	<0.003	200.7	0.015
TOTAL MERCURY (mg/l)	< 0.0002	245.1	0.002
TOTAL SELENIUM (mg/l)	0.003	200.7	0.01
TOTAL THALLIUM (mg/l)	<0.001	200.7	0.002
SULFATE (mg/l)	19.00	ASTM D516-90	300.0 *
CHLORIDE (mg/l)	15.0	SM 4500-Cl B	300.0 *
NITRATE (mg/l)	3.50	SM 4500-NO3 E	10.0
NITRITE (mg/l)	<1.0	HACH 8507	1.00
FLUORIDE (mg/l)	0.37	SM 4500-F C	2.00
ODOR (THRESHOLD #)	< 1.0	N/A	3.0
TEMPERATURE (C/F)	25/77	N/A	N/A
LANGELIER INDEX	+0.90	N/A	N/A

* DENOTES: Secondary Standards (Recommended)

CERTIFIED BY

281 568 7880 TEL • 281 568 8004 FAX • 11011 BROOKLET DR. #230 • HOUSTON, TX 77099-3543 • ELI@ENVIRODYNE.COM • WWW.ENVIRODYNE.COM

T-039 P001/001 F-049
01-07-'10 16:22 FROM-Envirodyne

TCEQ — MICROBIAL MONITORING FORM

Public/Private Water System Identification & Sample Collection Information (Please type or use block print)

Public Water System ID: (Must be 7 digits, include all zeroes)

Public Water System Name: CITY OF BASTROP

County: BASTROP

Send Results To:
- **Name:** LAYNE TX
- **Address:** 5931 BRITTMORE
- **City:** HOUSTON
- **State:** TX — 77041 — 77041 -
- **Phone #:** 281 627 6874 — **Fax #:** 713 466 8397
- **Sampler Name:** BEN
- **Sampler Contact #:** ☐ Owner ☐ Operator ☐ Other:

System Type : (✓) ☑ Public ☐ Private ☐ Bottled/Vended ☐ Other

Water Source : (✓) ☑ Groundwater ☐ Surface Water ☐ Groundwater with Surface Water Influence

Sample Identification/Location — Use Specific Address/Location	Collected: Date Month	Day	Year	Time (Please circle AM or PM)	Sample Type : (✓) Dup/Duplicate	Coliscreen	Raw Well	Special	Repeat	Include Lab ID of Original Positive or all Repeat Samples	Chlorine Residual: Free mg/L	Total mg/L	Rejection Criteria #	Total Coliform: Present	Total Coliform: Absent	E. coli: Present	E. coli: Absent	Laboratory Sample ID Number
NOT SITE # — Raw Wells Use Source ID for Well Sampled Ex: G1234587A																		
BASTROP BRYANT PARK	1	6	10	10:30 AM	☐	☐	☑	☐	☐					☐	☑	☐	☑	AA97863
BASTROP BRYANT PARK	1	5	10	14:30 PM	☐	☐	☑	☐	☐					☐	☑	☐	☑	AA97864
					☐	☐	☐	☐	☐					☐	☐	☐	☐	
					☐	☐	☐	☐	☐					☐	☐	☐	☐	
					☐	☐	☐	☐	☐					☐	☐	☐	☐	
					☐	☐	☐	☐	☐					☐	☐	☐	☐	
					☐	☐	☐	☐	☐					☐	☐	☐	☐	
					☐	☐	☐	☐	☐					☐	☐	☐	☐	
					☐	☐	☐	☐	☐					☐	☐	☐	☐	
					☐	☐	☐	☐	☐					☐	☐	☐	☐	

TCEQ Form: 10525 6/2009

*Unsatisfiable Sample Analysis- Rejection Criteria # Definitions

1) Sample Too old Analysis not initiated within 30 hours of collection
2) Quantity insufficient for analysis (100mL required)
3) Excessive Chlorine Residual (>10 mg/L)
4) Heavy Silt/Turbidity Present
5) Form Incomplete / Date Discrepancy (Errors Circled)
6) Other.

ENVIRODYNE LABORATORIES, INC
11911 BRICKLET, STE 230
HOUSTON, TX 77099
(281) 568-7880

TCEQ Lab ID: TX-288

ACCREDITED IN ACCORDANCE WITH NELAC
NELAC Certificate #: T104704265-09-TX
Test results meet all requirements of NELAC unless stated otherwise.

LABORATORIES ONLY: DO NOT WRITE TO THE RIGHT OF THIS BOLD CENTER LINE

Sample Iced? ☐ Yes ☑ No	Received By:	Date / Time Received:	1-6-10 1440
If no, temperature at receipt? 18 °C	Tested By:	Date / Time Tested:	1-6-10 1630
	Reported By:	Date / Time Reported:	

Report Approval Signature/Title:

Approving Technical Director: ☐ LB ☐ ☐ TOB ☐ — Date of Approval

Lab Results

T-054 P001/001 F-069
01-11-'10 09:09 FROM-Envirodyne

TCEQ — MICROBIAL MONITORING FORM

Public/Private Water System Identification & Sample Collection Information (Please type or use block print)

Public Water System ID: (Must be 7 digits, include all zeros)	
Public Water System Name:	CITY OF BASTROP JOB # 33-2806 CALL FOR POOL AT THE NEW WELL NA END TOTAL PRICE
County:	BASTROP

Send Results To:

Name:	Layne Christiansen
Address:	5931 Brittmoore
City:	Houston
State:	TX
Zip:	77041-8970
Phone #:	713-466-6001
Fax #:	713-466-83979
Sampler Name:	HARRY
Sampler Contact #:	281-627-6821

☐ Owner ☐ Operator ☐ Other: Layne

System Type: (1) ☐ Public ☑ Private ☐ Bottled/Vended ☑ Other

Water Source: (2) ☑ Groundwater ☐ Surface Water ☐ Groundwater with Surface Water Influence

Sample Identification/Location Use Specific Address/Location NOT SITE # Raw Wells Use Source ID for Well Sampled Ex: G1234567A	Collection Date Month	Day	Year	Collection Time Please circle AM or PM	Sampling Type: (3) Distribution	Compliance	Raw Well	Special	Repeat	Include Lab ID of Originating Positive on all Repeat Samples
NEW WELL BASTROP	01	07	10	10:56 AM	☐	☑	☑	☐	☐	

ENVIRODYNE LABORATORIES, INC
11011 BRICKLET, STE 230
HOUSTON, TX 77099
(281) 568-7880

ACCREDITED IN ACCORDANCE WITH NELAC
NELAC Certificate #: T104704265-09-TX
Test results meet all requirements of NELAC unless stated otherwise.

TCEQ Lab ID: TX-288

LABORATORY USE ONLY - DO NOT WRITE TO THE RIGHT OF THE COLD CENTER LINE

Sample Iced? Yes ☐ No ☐	Received By: JS	Date / Time Received:	1-07-10 @ 1321
If no, temperature on receipt: °C	Tested By: Q	Date / Time Tested:	1-7-10 1630
	Reported By: K	Date / Time Reported:	1-8-10 @ 1505
Report Approval Signature/Title:			
Approving Technical Director:	☐ LB ☐ TOB	Date of Approval	

Chlorine Residual: ☐ Free mg/L ☐ Total mg/L

Lab Results

Rejection Criteria #	Total Coliform Present	Total Coliform Absent	E. coli Present	E. coli Absent	Laboratory Sample ID Number
	☐	☑	☐	☑	BA99817
	☐	☐	☐	☐	
	☐	☐	☐	☐	
	☐	☐	☐	☐	
	☐	☐	☐	☐	
	☐	☐	☐	☐	
	☐	☐	☐	☐	
	☐	☐	☐	☐	
	☐	☐	☐	☐	
	☐	☐	☐	☐	

TCEQ Form: 10525 8/2009

Unacceptable Sample Aspects — Rejection Criteria # Definitions:

1) Sample Too old, Analysis not initiated within 30 hours of collection
2) Quantity insufficient for analysis (100mL required)
3) Excessive Chlorine Residual (>10 mg/L)
4) Heavy Silt/Turbidity Present
5) Form Incomplete / Data Discrepancy (Errors Circled)
6) Other

CHRISTENSEN PUMPS

DIMENSIONAL OUTLINE

VIS-WT

3 Stage 5x7CLC

Christensen Pumps
A division of
Layne Christensen Company

Note: install 1/4" airline and 1& 1/4" PVC dip tube.

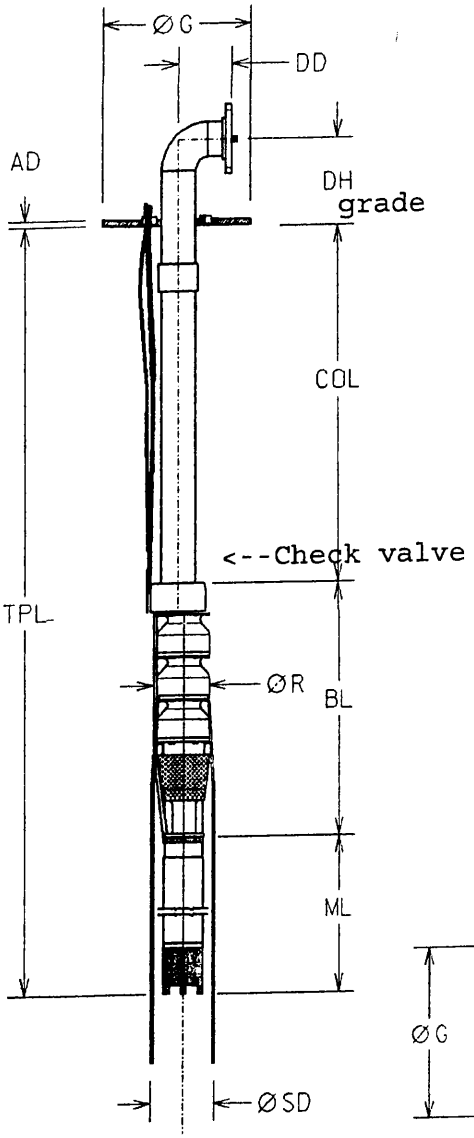

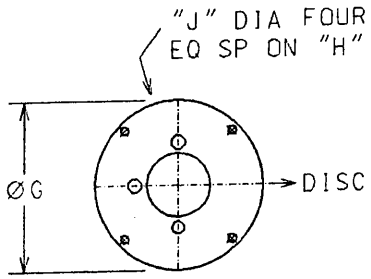

WELL HEAD

AD:	
AG:	
BL:	32.02
CD:	
CL:	N/A
COL:	57.00'
DD:	0.00
MIN SUB:	14.0
DH:	approx 10'
G:	
H:	
HH:	
J:	
R:	
ML:	40.60
SL:	
TPL:	63.1'
UG:	N/A
V:	
W:	
X:	
SD:	8.00
Y:	
Z:	

Pump Data

Size:	7CLC
Stages:	3
BowlShaft:	1.19"
LineShaft:	N/A
LineShaft Type:	N/A
Column:	
Column:	5" Threaded
Bearing Spacing:	N/A
Section Length:	20 feet
Head:	Well Head
Flange (Disch.):	5"- RF
Inlet:	
Seal:	N/A
Strainer:	Shroud
SubBase:	N/A
Motor Diameter:	6"

Hydraulic Data

Flow (gpm):	400
Pump Head (ft):	194.9
TDH (ft):	238.0
Speed (rpm):	3450
Fluid:	Water
Temperature (F):	60
Viscosity:	1.105
Spec.Grav:	1

Miscellaneous

Thrust At Design (lb):	842
Thrust At Shutoff (lb):	1318
Pumping Level(in):	492

Weight

Pump (lb):	891
Motor (lb):	220
Total (lb):	1111

Motor Data

Model:	236 617 90
Make:	Franklin
HP:	40
RPM:	3600
Type:	SUB
Efficiency:	84.0
Nominal Dia:	6"
Voltage:	460

Version: 4.00C

Customer:

Date: 07-12-2009

CHRISTENSEN PUMPS

HYDRAULIC ANALYSIS
VIS-WT
3 Stage 5x7CLC

Christensen Pumps
A division of
Layne Christensen Company

Overall Pump Parameters

Size and Model:	7CLC	Pump Operating Speed, RPM:	3450
Capacity, GPM:	400	Total Dynamic Head, Ft.:	238.0
Total Pump Length, In.:	696.6	Impeller Trim, In.:	5.1
Pump Type:	Submersible	Head Type:	Well Head
Pump K-Factor:	3.5	Number of Stages:	3
		Pumping Level, In.:	492.0

Bowl Data

Total Bowl Length, In.:	32.02	Bowl Diameter, In.:	7.125
Bowl Shaft Dia, In.:	1.19	Bowl Shaft Limit, HP:	244
		Bowl Shaft Material:	416SS

Column Data

Column Diameter, In.:	5	Column Load, Lb.:	552.3
Wall Thickness, In:	0.258	Column Elongation, In.:	0.00
		Shutoff Column Elongation, In.:	0.00

HorsePower Data

		Thrust Load Loss, Hp.:	0.00
Bowl HP At Design, Hp.:	30.2	Motor HorsePower, Hp.:	40

Other Data

Hydraulic Thrust, Lb.:	833.0	Thrust at Design, Lb.:	842.3
Thrust at Shutoff, Lb.:	1318	Actual Head above Grade, Ft.:	194.92
Suction Pressure, psi:	0.0	Shutoff Disc Pressure, psi:	144.2
Column Loss, Ft.:	1.59	NPSHa, Ft.:	45.96
Head Loss, Ft.:	0.49	NPSHr, Ft.:	16.00
Total Loss, Ft.:	2.08	NPSH margin, Ft.:	29.96

Efficiency Data (Efficiencies estimated not guaranteed)

Bowl Efficiency:	79.40	Pump Efficiency:	78.71
Motor Efficiency:	84.00	Overall Efficiency:	66.11
		KWH/1000 gallons:	1.13

Component Weights

Bowl Weight, Lbs.:	131	Column Weight,Lbs.:	760
Head Weight, Lbs.:	0	Can Weight,Lbs.:	0
Motor Weight, Lbs.:	220	Total Pump Weight,Lbs.:	1111

Version: 4.00C Customer: Date: 07-12-2009

CHRISTENSEN PUMPS

SECTIONAL
VIS-WT
3 Stage 5x7CLC

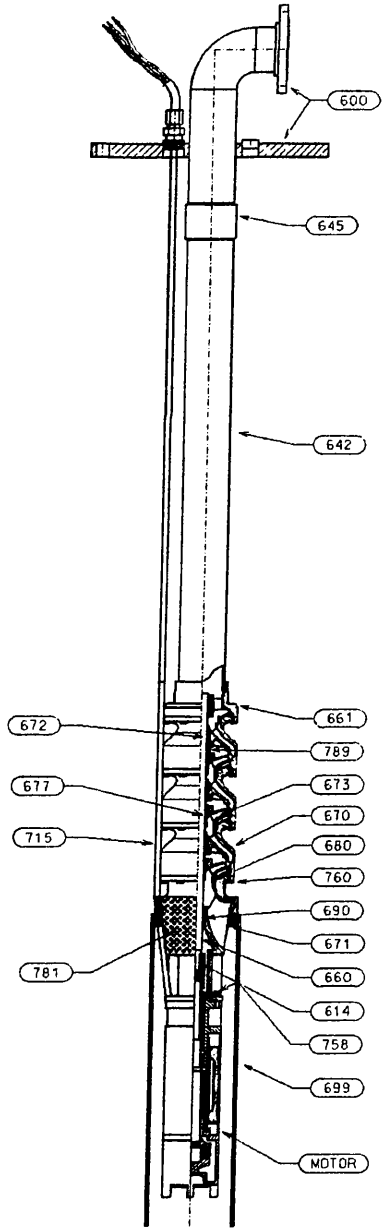

DISCHARGE HEAD ASSEMBLY

ITEM	NAME	Code	MATERIAL	ASTM
600	HEAD- DISCHARGE	9645	CARBON STEEL FAB	A53

COLUMN AND LINESHAFT ASSEMBLY

642	COLUMN PIPE	6501	BLACK PIPE SCH 40	A 53-98
645	COLUMN COUPLING	6501	BLACK PIPE SCH 40	A 53-98

BOWL ASSEMBLY

614	COUPLING -- SUB MOTOR	2218	SST 416	A582M-95b
660	SHAFT- BOWL	2227	SST 416	A582M-95b
661	BOWL- DISCHARGE	1003	CAST IRON CL30	A48-94ae1
670	BOWL- INTERMEDIATE	6911	CAST IRON CL30 ENAMEL	A48-94e1
671	SUBADAPTER	1018	DUCTILE IRON 65-45-12	A536-84(1999)e1
672	BEARING- INT BOWL	1109	FEDERALLOY BISMUTH BRZ	B584-00
673	IMPELLER	1102	SILICON BRONZE C87600	B584-00
677	COLLET- IMPELLER	2218	SST 416	A582M-95b
680	WEAR RING- BOWL	1128	BRONZE, AL C95400	B148-97e1
690	BEARING- SUCTION	1109	FEDERALLOY BISMUTH BRZ	B584-00
699	SHROUD- MOTOR	6560	PVC	D1785
715	GUARD- CABLE	3215	SST 304	A240M-00
758	CAPSCREW- HEX (MOTOR)	2228	SST 304	A276
760	CAPSCREW- HEX	2298	STEEL BOLTING GR 8	J429-99
781	SCREEN- SUCTION	3215	SST 304	A240M-00
789	WASHER- UPTHRUST	6266	TIVAR 1000	X

Christensen Pumps
A division of
Layne Christensen Company

ADDITIONAL PUMP COMPONENTS

The following is a list of the additional components you ordered.
Consult factory for any other components or services.

Component

Shroud
Bronze Wear Rings
416SS Collets
Dynam. Bal. Impeller

Version: 4.00C

Customer:

Date: 07-12-2009

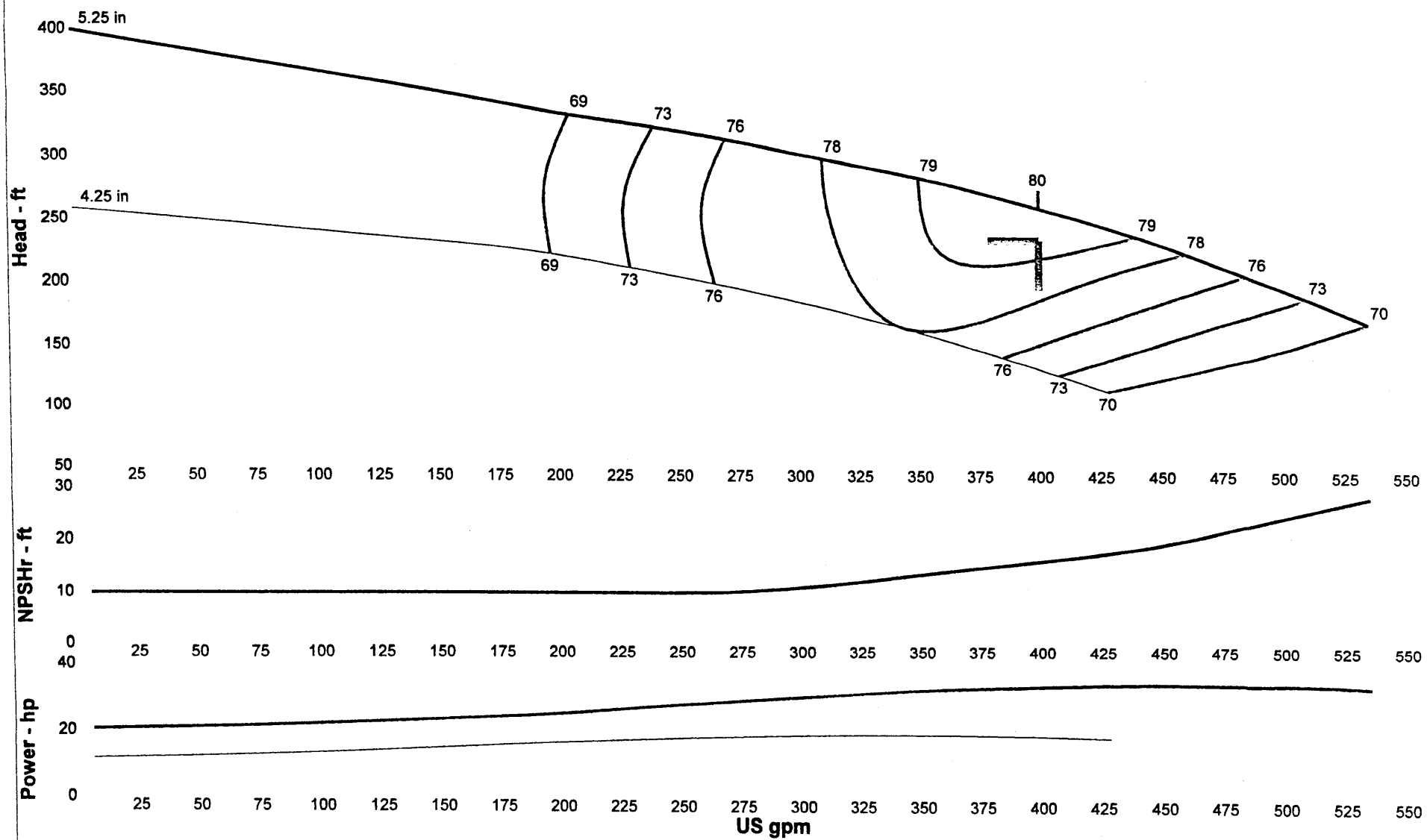

Discharge Sizes-5",6". Curves are certified for water at 60°F only. Consult factory for performance with any other fluid.

Company: CHRISTENSEN PUMPS
Name: Batrop Bryant Park Well
2/16/2010
bastrop A.ufs

Submersible 60 Hz
Catalog: Ch Sub 60HZ, Vers 3.26
Submersible - 3600
Design Point: 400 US gpm, 235 ft

Size: 7CLC 3 stage
Speed: 3450 rpm
Dia: 5.25 in
Curve: E6207CFPC3

Christensen
Christensen Pumps
A division of
Layne Christensen Company